Quad Screen Splitter LCD Console Drawers

Optimize rack space. Maximize rack monitoring

(USB Port for device access)

Switching port by simply moving the mouse cursor across each screen boundary on QSS mode

The Annso range of Quad Screen Splitter (QSS) LCD console drawers represents the latest technology in KVM switching. The key advantage over conventional KVM switches is that it allows you to simultaneously display and administer 4 computers on a single console. It combines KVM features and a digital multi-viewer scaling and converting videos at both inputs and output.

Configure with 17 or 19 inch A-Grade LCD panels, integrated 4 ports DVI-D/USB/Audio/HUB, support Full screen and Quad screen mode.

The self-locking rails when in the fully extended open position and the ultra convenient auto lock release when the LCD panel is closed, make for simple and hassle free operation.

Features

- 1U single rail with 17” or 19’’ LCD Monitor,
- Four Independent DVI-D/USB/Audio/HUB interface for each PC.
- Support Full screen and Quad screen mode
- On Quad Screen mode, by Mouse moving across screen boundary or via Push Button or Hotkey to switching port
- Front 1 x , rear 2x USB 2.0 Type A, Sharing USB peripheral Device for each computer. (Ex, flash disk, hard driver, KB/Mouse)
- Build in 2x2w stereo speakers.
- Durable 104-key keyboard and touch pad.
- Quick and simple installation.
- Self-locking and auto release rails for ultra convenience.

Rear of KVM-1704QSS/1904QSS-M2

Part No.		KVM-1704QSS-M2	KVM-1904QSS-M2
Direct no. of Computers		4 x DVI-D/ USB / Audio & 2x HUB	
Maximum no. of Computers		4	
LCD	Size	17”	19’’
	Backlight	LED	LED
	Resolution	1280 x 1024	1280 x 1024
	Max.color	16.7M	16.7M
	Luminance	250cd/m2	250cd/m2
	View Angel (H/V)	176 / 170	170 / 160
	Contrast Ratio	1000 : 1	1000 : 1
Port Selection		Mouse moving across screen boundary , Push Button or Hotkey	
USB HUB		Front 1 x , rear 2x USB 2.0 Type A for USB Peripheral Device	
KB/Mouse Emulation		USB	
Rack Depth		500mm to 1100mm (rack cabinet front rails to rear rails)	
Power		100-240V AC 50/60Hz via IEC Type power cord	
Environment		Operation temp: 0 to 50℃ Storage temp: -20 to 60℃ Humidity: 10% - 90%, non-condensing Shock: 10G acceleration (11ms duration) Vibration: 17 to 500Hz 1G PTP	
Physical Dimensions / Net Weights		448x42x580mm (WxHxD) / 12KG	448x42x580mm (WxHxD) / 12.5KG
Packing Dimensions / Gross weights		720x190x800mm (WxHxD) / 18KG	720x190x800mm (WxHxD) / 18.5KG
Accessory			
1.8meter IEC Type Power Cord ,1.8meter DVI Cable x4 , 1.8meter USB Cable x 4 , 1.8meter Audio Cable x 4			

102 route de Limours - DOMAINE DE ST PAUL - BAT
A6 - Bureau 3
78470 ST REMY LES CHEVREUSE
Tel : 09 54 16 23 53 - Fax : 09 59 16 23 53
www.sacasa.info - contact@sacasa.info

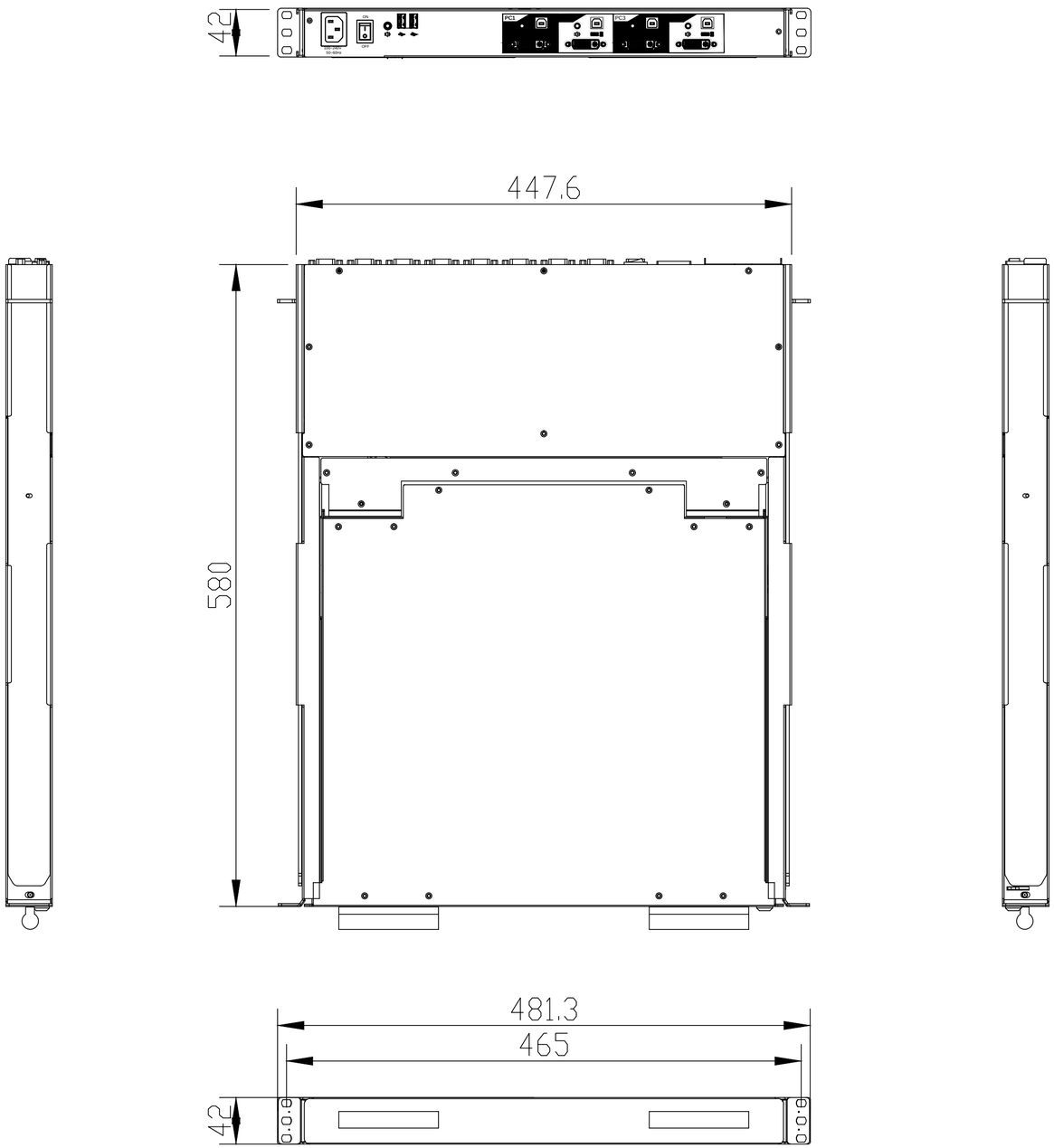

KVM-1704QSS-M2

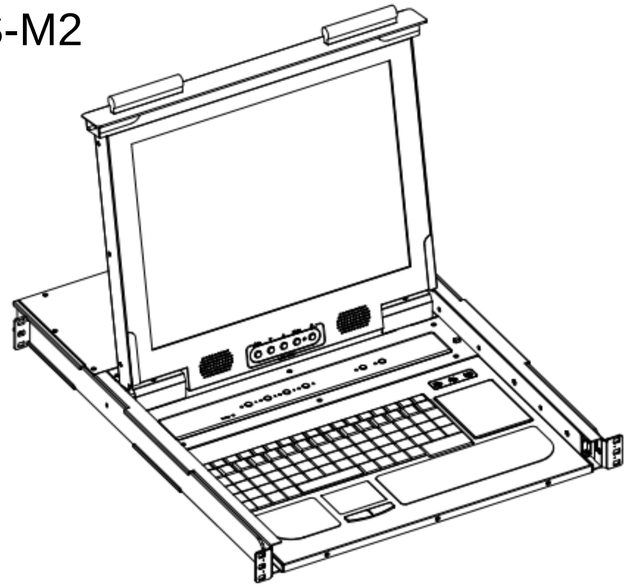
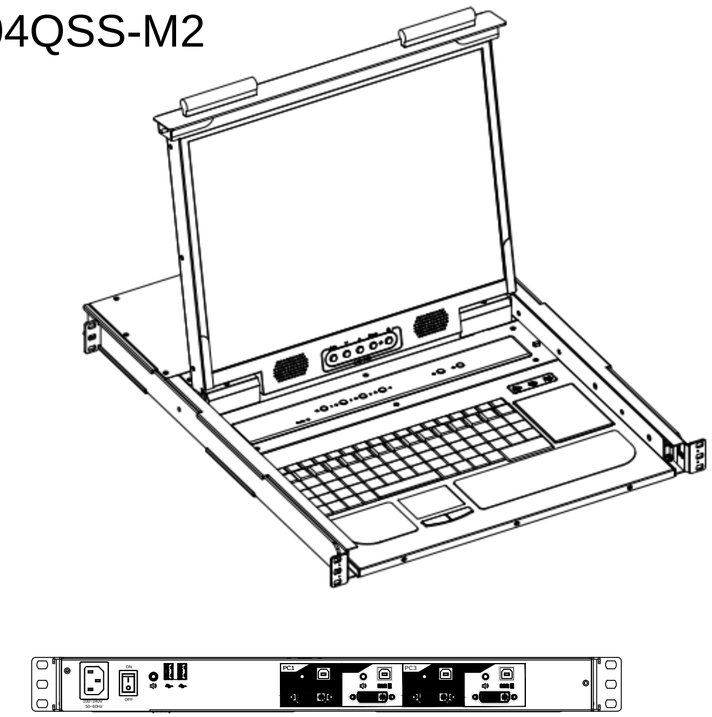
KVM-1904QSS-M2